3-PIECE BALLVALVES SERIES 20D

Actuator direct mounting
Full bore and reduced bore
Stainless steel A351 CF8M Carbon steel A216 WCB

FIRESAFE certified acc. to BS 6755
In accordance with PED 97/23/EC
CE 0036

DN 08 - DN100 / PN 64

PROCOL ENGINEERING AG
CH-8320 Fehraltorf Tel. +41-1- 954 88 77 Fax +41-1- 954 88 78
www:procol-ag.ch

Typ A20D antistatisch / AF20D antistatisch firesafe

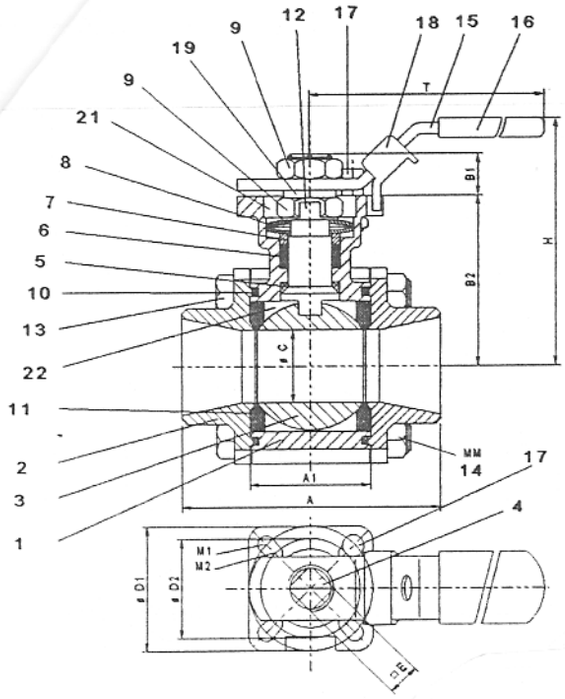

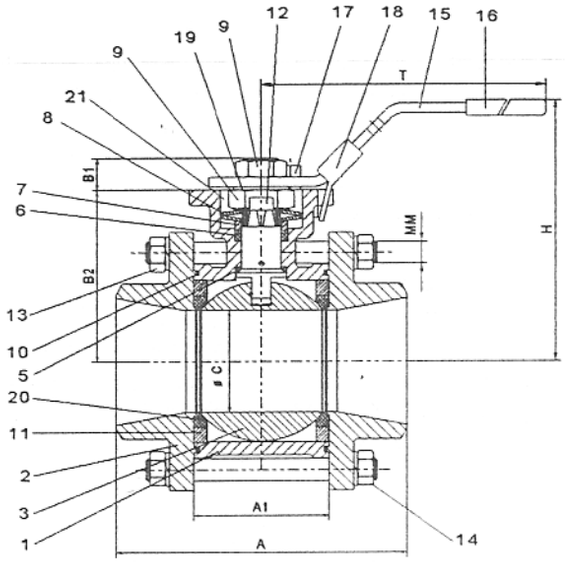

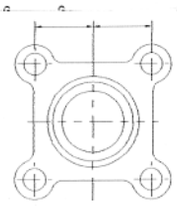

DN 08 - DN 40 full bore
DN 20 - DN 50 red. bore
encapsulated bolts

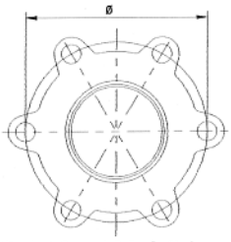

DN 50 - 100 full bore
DN 65 - 100 red. bore

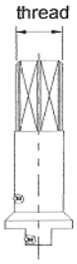

Stem with
2 antistatic -
devices
(Standard)

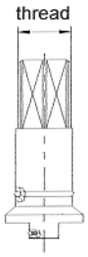

Stem with
1x antistatic and
1 x Viton O-Ring
(Option)

		Stainless steel	Carbon steel
1	Body	A351 CF8M	A216 WCB
2	End cap	A351 CF8M	A216 WCB
	BW end	A351 CF3M	A216 WCB
3	Ball	316	316
4	Stem	316	316
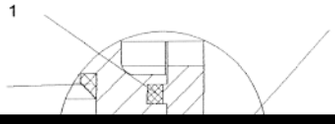
AF20D antistatic firesafe